Applicable products

This document is applicable to the **RV-200**, **RV-212(P/S)**, and **RV-220(P/S)** RealVision™ 3D bronze thru-hull transducers.

These transducers are capable of producing 3D sonar images when connected to **RealVision™ 3D** variant MFDs running **LightHouse™ 3** software. Five transducers are available in the RV-2xx series, each having the same external shape and dimensions.

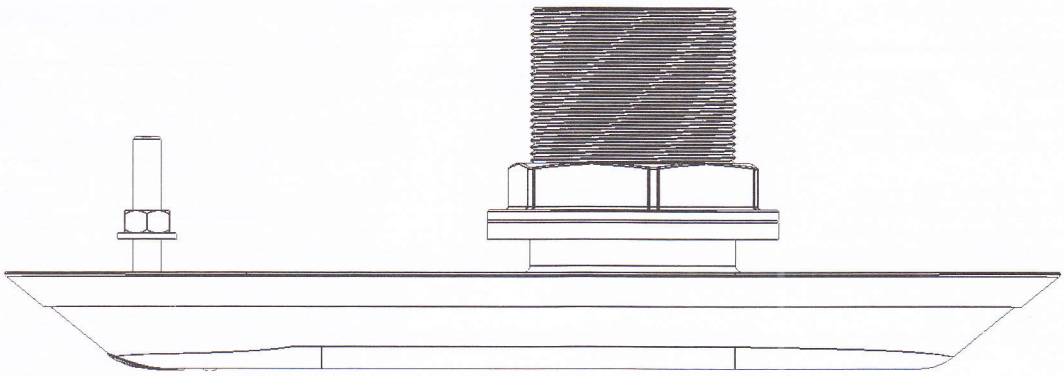

The transducers differ internally, and contain different numbers and types of transmit and receive elements. Your installation should comprise either a single **RV-200** transducer, or a split-pair of **RV-212(P/S)** or **RV-220(P/S)** transducers.

The hull geometry of your vessel determines the most appropriate transducers to use. You should fit transducers whose internal elements are matched to within ±6° of your hull's deadrise angle, as shown in the following table:

Model no.	Part no.	Description	Hull geometry
RV-200	A80465	RealVision™ 3D Bronze Thru-Hull Transducer, 0°, single ("all in one")	Hull with 0° (flat-bottom) to 6° deadrise angle.
RV-212P	A80466	RealVision™ 3D Bronze Thru-Hull Transducer, **12**°, split-pair	Hull with 6° to 18° deadrise angle, port side (pair with A80467 below)
RV-212S	A80467		Hull with 6° to 18° deadrise angle, starboard side (pair with A80466 above)
RV-220P	A80468	RealVision™ 3D Bronze Thru-Hull Transducer, **20**°, split-pair	Hull with 14° to 26° deadrise angle, port side (pair with A80469 below)
RV-220S	A80469		Hull with 14° to 26° deadrise angle, starboard side (pair with A80468 above)

- Bronze thru-hull transducers are recommended for fiberglass and wooden hulls and should not be used on a metal hull.
- Do NOT install bronze transducers on vessels with a positive ground system.

Important: This installation sheet is applicable to the bronze-construction RV-2xx–series thru-hull transducers only. For RV-3xx–series plastic-construction thru-hull transducers, refer to the separate installation sheet.

Tools required

The following tools are required to install any of the transducers listed under "Applicable products".

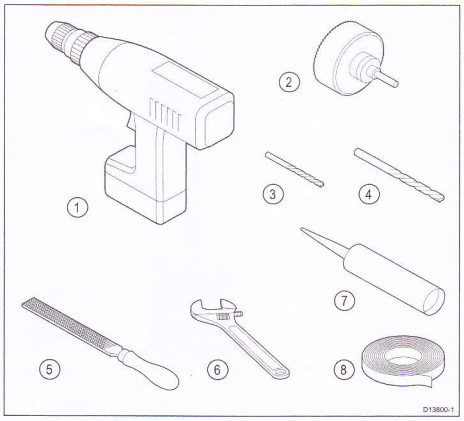

1	Power drill
2	62 mm / 2⅜ inch hole cutter
3	Drill bit (suitable size for drilling pilot holes)
4	9 mm / ⅜ inch drill bit (for drilling anti-rotation bolt hole)
5	Half round file
6	75 mm / 3 inch wrench (spanner) or suitable size adjustable wrench (spanner)
7	Marine grade sealant (non-acetate based)
8	Adhesive tape

Warning: Marine-grade sealant

Only use marine-grade neutral cure polyurethane sealants. Do NOT use sealants containing acetate or silicone, which can cause damage to plastic parts.

Testing the transducer

Transducer operation should be checked before installation.

1. Connect the transducer to the multifunction display's transducer connection.
2. Fully submerge the transducer in water.
3. Power up the display.
4. Open a Fishfinder application on your display.
5. If required, select the relevant transducer/channel from the Channel selection page (**Menu > Channel**).
6. Check that accurate depth and temperature readings are displayed.
7. If you experience difficulties obtaining readings then contact Raymarine Technical Support.

Warning: Transducer operation

Only test and operate the transducer in the water. Do NOT operate out of water as overheating may occur.

Caution: Transducer cable

- Do NOT use the transducer cable to lift or suspend the transducer; always support the transducer body directly during installation.
- Do NOT cut, shorten, or splice the transducer cable.
- Do NOT remove the connector.

If the cable is cut, it cannot be repaired. Cutting the cable will also void the warranty.

Multiple transducers

Note: If you are installing a split-pair of transducers (for example, an **RV-212P** unit with an **RV-212S** unit), ensure that you test both transducers together by connecting them to the multifunction display using a Y-cable and extension cable.

Refer to the colored "Port" and "Starboard" labels on the cables to ensure that you connect the transducer cables to the correct Y-cable tails.

Location requirements

Follow the guidelines below when selecting a location for your single transducer or split-pair transducers.

For best performance, transducers should be installed in a location with the least turbulence and aeration.

Important: Do NOT install transducers in-line with trailer rollers, your vessel's engine intake or discharge openings.

- Transducers should be installed as close to the center line of the vessel as possible.
- The mounting surface for the transducers should be flat so that the supplied rubber washer sits firmly against the hull.
- When installing split-pair transducers with angled elements, you must ensure that the hull's deadrise angle at the chosen mounting location is appropriate for the selected transducers. Refer to the table in **Applicable products**.

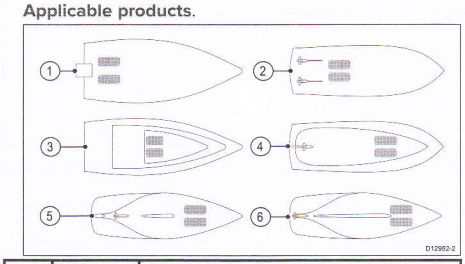

1	Planing hull	**Outboard or I/O** — mount forward and to the side of the propeller(s)
2	Planing hull	**Inboard** — mount forward of the propeller(s) and shaft(s)
3	Planing hull	**Stepped hull** — mount on the first step as far aft as possible
4	Dis-place-ment hull	**Displacement hull** — mount approximately 1/3 of the way along the length of the hull, measured along the waterline
5	Keel sail-boat	**Fin keel** — mount forward of the keel, ensuring that the keel will not obstruct the transducers wide beam width
6	Keel sail-boat	**Full keel** — mount away from the keel at a location with minimum dead rise, ensuring that the keel will not obstruct the transducers wide beam width

- The transducers should be installed away from any protrusions such as other transducers, steps, ribs, strakes, or rows of rivets.

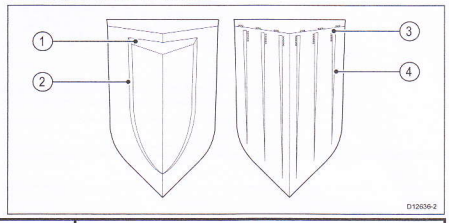

1	Step
2	Rib
3	Row of rivets
4	Strake

- Transducers should be installed in a location where no load will be applied to the transducers during, launching, lifting, trailering and storage of the boat.
- Transducers must be installed in the correct orientation, with the anti-rotation bolt closest to the stern of the vessel. Additionally, a direction arrow pointing to the bow is embossed on the anti-rotation bolt cap. Refer to the the illustration in **Mounting — RV-2xx bronze thru-hull**, which includes a "bow" direction arrow.
- When installing split-pair transducers:
  - the correct transducer (port or starboard) must be installed in the matching (port or starboard) side of the hull; each transducer in a split pair has a label on the attached cable, and markings and labels on the transducer body to help you identify the transducer:

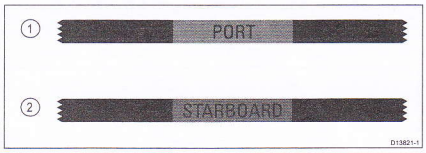

Item	Color	Description
1	Red	Port-side split-pair transducer cable
2	Green	Starboard-side split-pair transducer cable

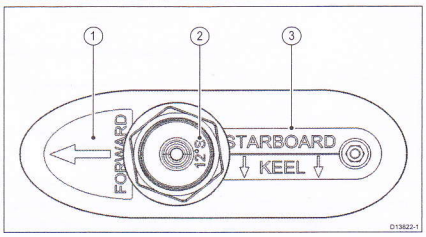

Item	Description
1	Direction to vessel bow
2	Element angle and vessel side: – ("12°"; "20°") – (port, "P"; starboard, "S") Single (all-in-one) transducers are marked "0°".
3	Vessel side and direction to vessel keel Single (all-in-one) transducers omit this label.

  - choose mounting positions that are symmetric about the center line of the vessel.

  - choose mounting positions that are at least 300 mm (12 inches) below the water line.
- Transducers should be installed in a location where there is sufficient clearance inside the hull to fit the nut and have at least 100 mm (4 in) of headroom to allow for withdrawal.
- To avoid interference with the internal magnetometer, mount transducers at least 1 m (39 inches) from other electrical devices.

Transducer dimensions — RV-2xx

All transducers in the RV-2xx series have the same external dimensions.

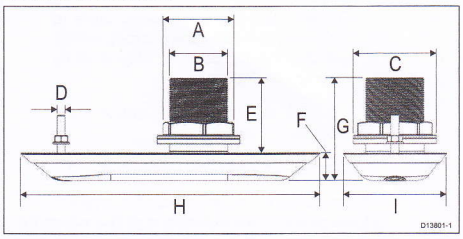

Dimension	Measurement
A	72.7mm (2.86 in.)
B	60.0 mm (2.36 in.)
C	85.0 mm (3.35 in.)
D	8.0 mm (0.31 in.)
E	80.0 mm (3.15 in.)
F	30.1 mm (1.19 in.)
G	109.0 mm (4.29 in.)
H	308.0 mm (12.13 in.)
I	105.3 mm (4.15 in.)

- **RV-200** attached cable length: 8 m (26.2 ft).
- **RV-212(P/S)** and **RV-220(P/S)** attached cable length: 2 m (6.5 ft).

Mounting — RV-2xx bronze thru-hull

This procedure applies to all transducers in the RV-2xx series.

The following procedure should only be performed with your vessel out of the water.

Important:

- Do NOT use the transducer cable to lift or suspend the transducer; always support the transducer body directly during installation.
- The threads on the Hull nut may be sharp, ensure that the supplied Cable protector is fitted to the Hull nut before feeding the transducer cable through the nut.
- Do not remove the label attached to the transducer cable as it helps to ensure that connections are made correctly.

Important: Wooden hulls may be susceptible to shrinkage if the vessel is removed from the water for an extended period, followed by swelling when the vessel is returned to the water.

To avoid leaks or damage to the transducer caused by swelling:

- ensure that the vessel has been in the water for some time immediately prior to removing the vessel from the water and starting the transducer installation.
- when you have completed the transducer installation and fully tightened the hull nut and anti-rotation nut, return the vessel to the water to avoid subsequent hull shrinkage.

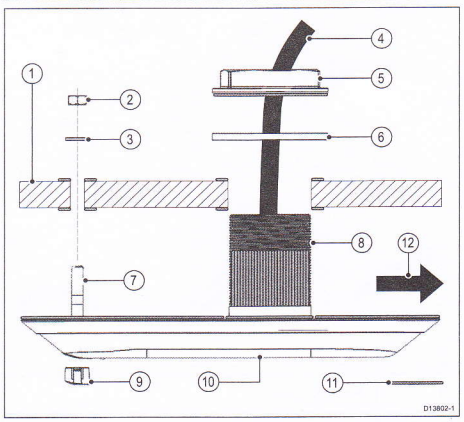

1	Hull
2	Anti-rotation nut
3	Bronze washer
4	Transducer cable
5	Hull nut

6	Rubber washer
7	Anti-rotation bolt
8	Transducer stem
9	Anti-rotation bolt cap
10	Transducer
11	Marine grade sealant (non-acetate based)
12	Direction of vessel's bow

1. Using the location guidelines provided, ensure you have selected an appropriate location for the transducer. (See **Location requirements**.)
2. Check the labels on the bronze face of the transducer to confirm that you are using the correct type of transducer (element angle; port or starboard) for the mounting location you have chosen.
3. Fix the transducer mounting template to the selected location using masking or self-adhesive tape, ensuring that the arrow on the template is pointed towards the vessel's bow.
4. Drill a pilot hole for the transducer stem hole.
5. Drill the stem-hole out using a suitable size hole cutter.
6. Using a half round file and / or sandpaper, ensure there are no rough edges or burrs around the stem hole.
7. Guide the transducer cable up through the hole in the vessel's hull while supporting the transducer from beneath.
8. From inside the vessel, feed the transducer cable through the rubber washer.
9. Guide the transducer stem up through the hole in the vessel's hull, while supporting the transducer from beneath.
10. With the transducer held in place, check that the anti-rotation bolt hole lines up correctly with the mounting template.
11. Drill a pilot hole for the anti-rotation bolt hole.
12. Drill the hole for the anti-rotation bolt using a suitable size drill bit.
13. Lower the transducer away from the hull (while keeping the cable threaded through the hull), and remove the mounting template; ensure that the transducer is still supported from beneath.
14. Carefully remove all labels from the bronze face of the transducer.
15. Wipe all surfaces, both outside and inside the hull, with an appropriate cleaning agent (for example, isopropyl alcohol), and ensure they are dry, clean and free from debris.
16. Apply a thick bead of marine-grade sealant:
    i. all around the base of the transducer stem, where it will meet the hull.
    ii. all around the threaded section of the stem, ensuring that the sealant will protrude approximately 6 mm above the final tightened hull nut.
    iii. all around the stem hole, on the exterior of the hull.
    iv. all around the anti-rotation bolt hole, on the exterior of the hull.
17. Apply marine-grade sealant all over the top, bronze face of the transducer, where it will meet the hull.
18. Guide the transducer stem up through the hole in the vessel's hull, while supporting the transducer from beneath.
19. Fit the anti-rotation bolt by sliding it up through the transducer housing, ensuring that the bolt head is properly seated within the transducer.
20. Apply a thick bead of marine-grade sealant:
    i. all around the stem hole, on the interior of the hull.
    ii. all around the anti-rotation bolt hole, on the interior of the hull.
21. Slide the rubber washer down the transducer cable, and over the threaded section of the transducer stem; ensure that the washer is sitting on the sealant.
22. Ensuring the cable protector is fitted to the hull nut, feed the transducer cable through the nut, resting the nut on top of the threaded stem-tube.

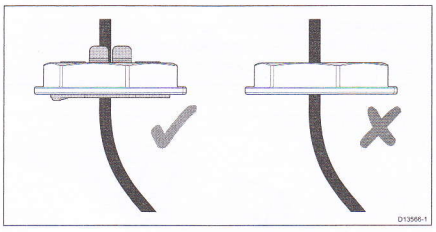

23. Remove the Cable protector by pulling the 2 tabs away from the back of the Hull nut.

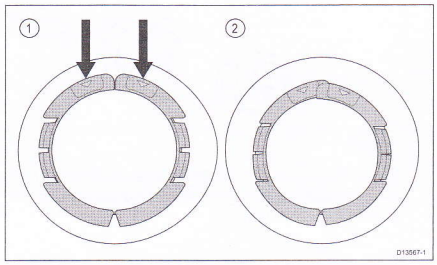

24. Apply a thick bead of marine grade sealant to the bottom face of the Hull nut.
25. Screw the hull nut onto the threaded stem-tube and tighten by hand.
26. Fully tighten the hull nut using a suitable sized wrench (spanner).

In order to prevent leaks and transducer movement, ensure that the nut is adequately tightened. You should see the sealant protruding from the edges of all applied surfaces.

Important: Do NOT overtighten. Overtightening can cause damage to the hull which may result in water leaking into the vessel.

27. From inside the vessel, slide the small bronze washer over the anti-rotation bolt.
28. Screw the anti-rotation bolt nut onto the bolt and tighten by hand.
29. Fully tighten the anti-rotation bolt nut using a suitable sized wrench (spanner).

Important: Do NOT overtighten. Overtightening can cause damage to the hull which may result in water leaking into the vessel.

30. Apply a small amount of marine grade sealant to the inside of the anti-rotation bolt cap.
31. Fit the anti-rotation bolt cap by pressing it firmly into the hole in the bottom face of the transducer.

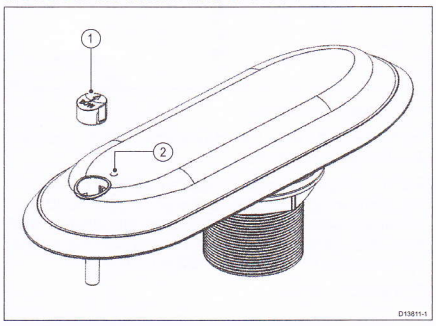

Ensure that the anti-rotation bolt cap (1), is oriented correctly, with the embossed "BOW" arrow pointing towards the temperature sensor in the base of the transducer (2).

32. To prevent aeration around the transducer, remove any excess sealant on the outside of the hull.
33. Ensure that the sealant has fully cured before putting the vessel back in the water.

Refer to the sealant manufacturer's instructions for curing times.

34. Once the vessel has been put back in the water check for leaks around the transducer immediately.

Important: Do NOT leave your vessel in the water unchecked for more than a few hours after first installing the transducer. Very small leaks may not be immediately obvious, and considerable bilge water could accumulate over the course of a day, or overnight.

35. Check for leaks at regular intervals after installation until you are satisfied that there are no leaks.
36. Ensure checking for leaks around the transducer is added to your routine vessel maintenance schedule.

Cable routing

Cable routing requirements for the transducer cable.

Important: To avoid interference, the cable must be routed as far away from VHF radio antenna cables as possible.

- Check that the cable is long enough to reach the equipment it will be connected to. If you are installing split-pair transducers, you must use a Y-cable (A80478) along with an extension cable to connect the transducers to your multifunction display. The following optional extension cables are available:
  - RealVision™ transducer extension cable 3 m (9.8 ft) (part number A80475)
  - RealVision™ transducer extension cable 5 m (16.4 ft) (part number A80476)
  - RealVision™ transducer extension cable 8 m (26.2 ft) (part number A80477)
- Use grommets in any pass through holes to prevent damage to the transducer cable.
- Secure the cable at regular intervals using cable clips (not supplied).
- Any excess cable should be coiled up at a convenient location.

Attaching the connector locking collar

The supplied cable is provided with a separate locking collar assembly, ensuring that the cable connection is secure.

This procedure describes how to attach the locking collar to the cable connector. The locking collar parts are supplied in a separate bag, in the package with your product.

Important: Ensure that you route the cable all the way to its destination **before** attaching the locking collar.

1. Slide the locking collar over the end of the connector, then push it towards the cable-end of the connector.

Important: Ensure that the lugs on the locking collar (labelled 'A' in the illustration), are closest to the plug-end of the connector.

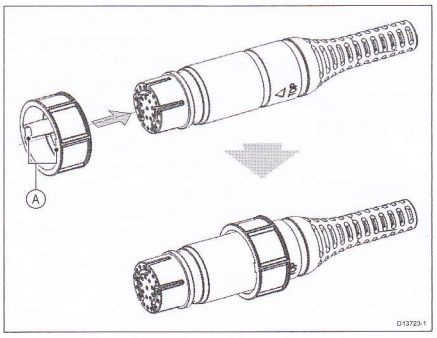

2. Slide the split-ring over the end of the connector, then push it towards the cable-end of the connector.

Important: Ensure that the tabs on the split-ring (labelled 'B' in the illustration), are closest to the cable-end of the connector.

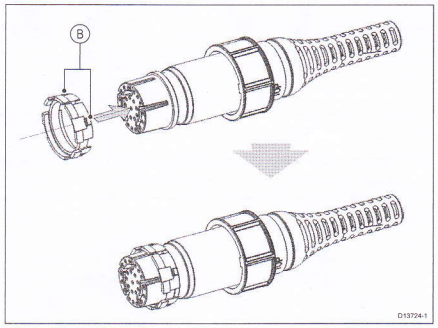

The split-ring slides easily for approximately 1 cm onto the connector, before butting up against the connector moulding.

3. Carefully insert the pointed end of the supplied tool into the split-ring's gap (labelled 'C' in the illustration).

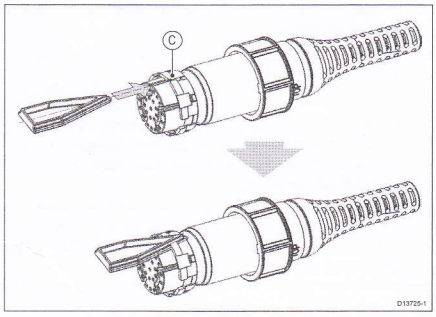

The tool widens the gap in the split ring, enabling the split ring to be pushed further back onto the connector in the following step.

Important: Always use the supplied tool when attaching the split ring. The split ring may become overstretched and break if you try to attach it without using the tool.

4. Use the tool to gently lever the split ring over the moulding on the connector until it snaps into position approximately 0.5 cm further back towards the cable-end of the connector.

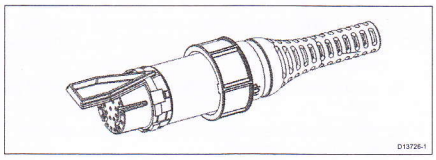

You can now remove the tool. The split-ring stays in position on the connector, but rotates freely.

5. Slide the O-ring over the end of the connector, and ensure that it is seated squarely against the connector moulding, adjacent to the split-ring.

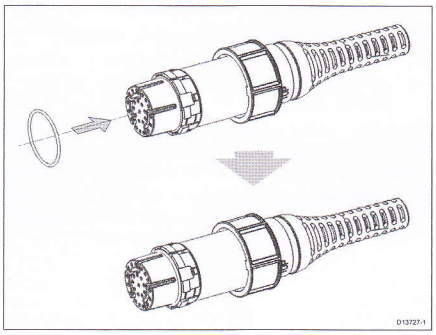

6. Slide the locking collar towards the plug-end of the connector, rotating the collar as necessary to ensure that the lugs on the locking collar (labelled 'D' in the illustration) pass through the channels (labelled 'E') in the split-ring.

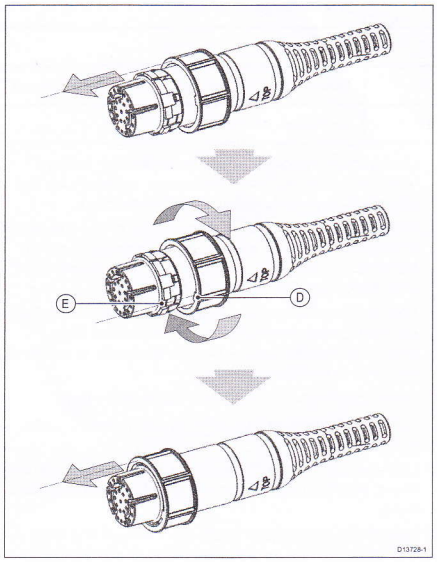

The locking collar slides easily towards the plug-end of the connector, before butting up against the split-ring moulding.

7. Grasp the body of the connector with one hand, then with the other hand, pull the locking collar firmly towards the plug-end of the connector.

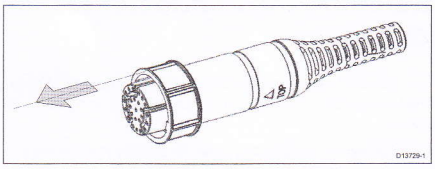

As you pull the locking collar, it clicks into place over the split-ring. The locking collar stays in position on the connector, but rotates freely.

Making connections

Follow the steps below to connect the transducer cable to your multifunction display.

1. Ensure that the vessel's power supply is switched off.
2. Ensure that the multifunction display has been installed in accordance with the installation instructions supplied with it.
3. If your installation comprises split-pair transducers:
   i. Connect the cable from each transducer to the Y-cable tails (A80478); check the colored labels on the cables to ensure that the transducers are connected to the correct Y-cable tail.
   ii. Connect an extension cable to the remaining free plug on the Y-cable. See **RealVision™ 3D transducer extension cable**.
4. Ensuring correct orientation, push the transducer cable (or extension cable) connector fully onto the corresponding connector on the multifunction display.
5. Turn the locking collar clockwise to secure the cable.

RealVision™ 3D transducer extension cable

For best performance, cable runs should be kept to a minimum. However, for some installations (including all split-pair transducer installations) it may be necessary to extend the transducer cable.

- 3 m (9.8 ft), 5 m (16.4 ft), and 8 m (26.2 ft) transducer extension cables are available (part numbers: 3 m - A80475, 5 m - A80476, 8 m - A80477).
- It is recommended that a maximum of two cable extensions are used, with the total cable length not exceeding 24 m.

Cable ferrite installation

Your product is supplied with a cable ferrite. To ensure EMC Compliance, the supplied ferrite must be fitted to the power cable according to the following instructions.

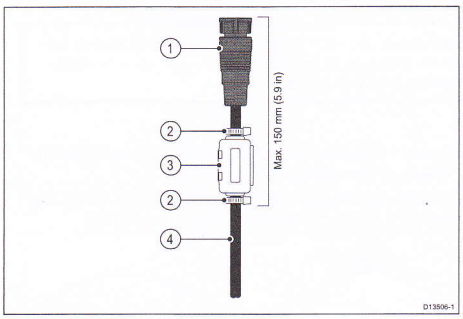

1. Transducer connector.
2. The supplied cable ties should be used to secure the ferrite in position.
3. Fit the supplied ferrite to the transducer cable, ensuring a tight fit. The ferrite should be fitted as close as possible to the connector, but ensure that the distance between the ferrite and the top of the connector is no more than 150 mm (5.9 in).
4. Transducer cable.